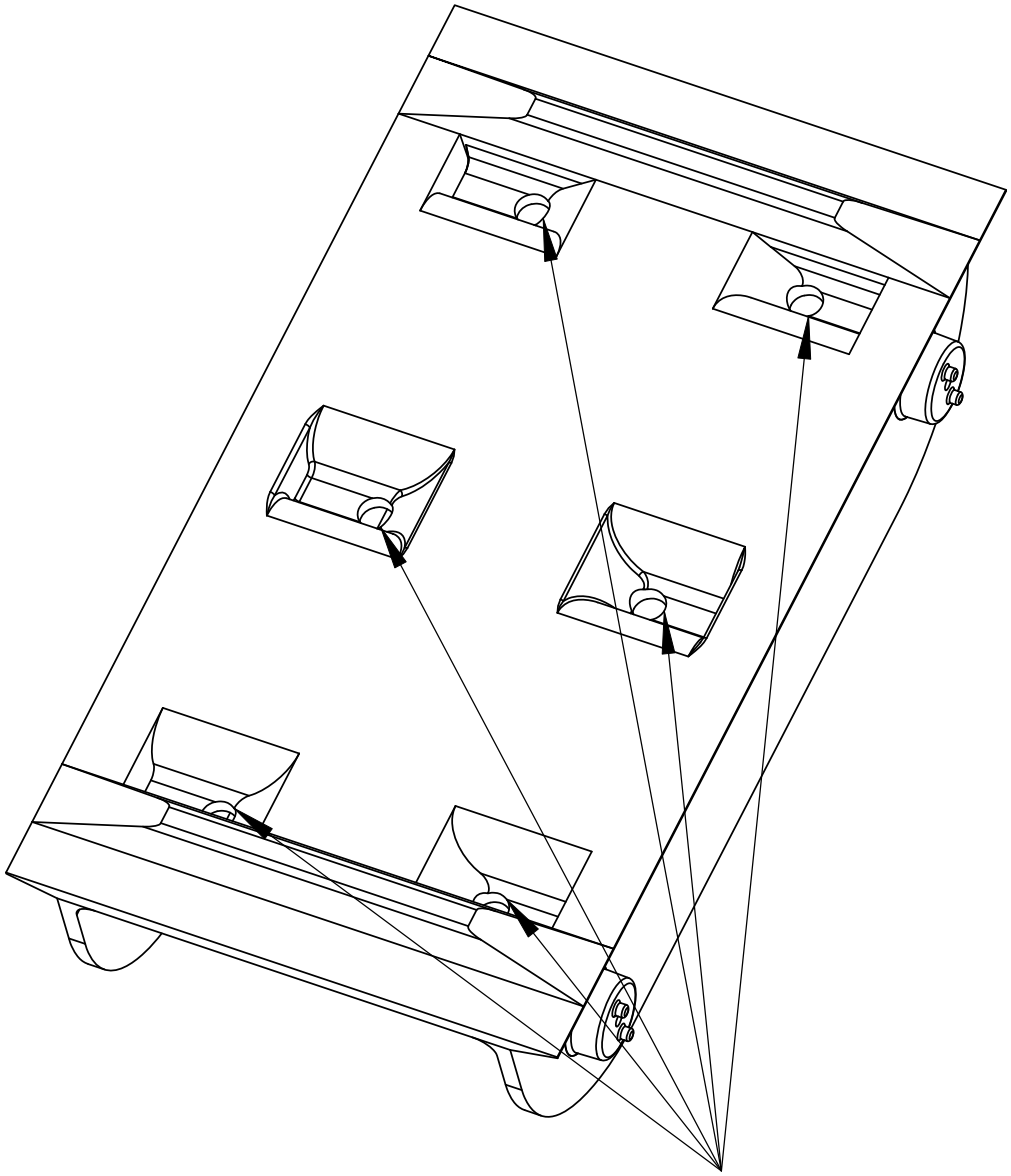

Drill 1" Diameter Hole 2 1/4" away
from outer wall in center of indentation of
lug as shown in each of 6 locations

DIMENSIONS ARE IN INCHES TOLERANCES: FRACTIONAL ± ANGULAR: MACH ± BEND ± TWO PLACE DECIMAL ± THREE PLACE DECIMAL ±		NAME	DATE	R.T.S.I.	
	DRAWN	JTR	06/08/09		
				Suction Relief Port Installation Guide	
DO NOT SCALE DRAWING				SIZE A / DWG. NO. PL506-0001A	REV. A
					SHEET 1 OF 1